Constar

DC CORELESS MOTOR

0716RN

Precious metal commutation

Applications: Wearable device, mobile phones, tablet PC, health care equipment, etc.

Characteristics

			-7-12	-7-61
1	Voltage	V	3	3
2	Terminal resistance	Ω	9.7	5.6
3	Speed	rpm	10500	13000
4	Current	mA	110	180
5	Starting voltage	V	0.8	0.8
6	Stall current	mA	300	500
7	Weight	g	4	4
8	Operating temperature range	℃	-20～+65	-20～+65

Outline Drawing

UNIT:mm

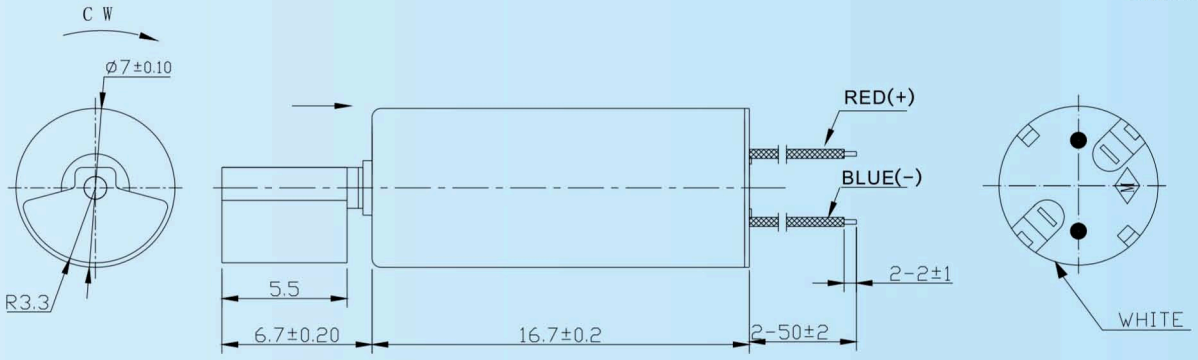

0716R2N55A1-7-12-50N-3.0

Options

Lead wires length
Shaft length
Eccentric weight
Silicone sets